SA-WEX200

SERVICE MANUAL

Ver 1.0 2001.09

US Model
Canadian Model

SA-WEX200 is sub woofer in CMT-EX200.

SPECIFICATION

Amplifier section

For the U.S.model
AUDIO POWER SPECIFICATIONS
POWER OUTPUT AND TOTAL HARMONIC DISTORTION:
With 4 ohms loads,from 50 – 150 Hz;rated 30 watts per channel minimum RMS power,with no more than 10%total harmonic distortion from 250 milli watts to rated output.

Canadian model:

Continuous RMS power output (reference):	30 watts (4 ohms at 55 Hz,10% THD)
Speaker system	Active sub woofer (magnetically shielded design)
Speaker unit	10 cm dia,cone type woofer (x2)
Practical maximum output	30 watts
Reproduction frequency range	45 – 150 Hz
High frequency cut-off range	70 – 150 Hz
Phase selector	Normal,reverse
Input	SPEAKER INPUT: Input terminal
Output	SPEAKER OUTPUT: Output terminal
Power requirements	120 V AC,60 Hz
Power consumption	40 watts
Dimensions	Approx.150 x 220 x 345 mm (w/h/d,incl. projecting parts and controls)
Mass	Approx.6.2 kg

Design and specifications are subject to change without notice.

ACTIVE SUBWOOFER

9-873-267-01
2001I0200-1
© 2001.9

Sony Corporation
Home Audio Company
Shinagawa Tec Service Manual Production Group

SONY®

SAFETY CHECK-OUT
(US model)

After correcting the original service problem, perform the following safety checks before releasing the set to the customer: Check the antenna terminals, metal trim, "metallized" knobs, screws, and all other exposed metal parts for AC leakage. Check leakage as described below.

LEAKAGE

The AC leakage from any exposed metal part to earth ground and from all exposed metal parts to any exposed metal part having a return to chassis, must not exceed 0.5 mA (500 microamperes). Leakage current can be measured by any one of three methods.

1. A commercial leakage tester, such as the Simpson 229 or RCA WT-540A. Follow the manufacturers' instructions to use these instruments.

2. A battery-operated AC milliammeter. The Data Precision 245 digital multimeter is suitable for this job.

3. Measuring the voltage drop across a resistor by means of a VOM or battery-operated AC voltmeter. The "limit" indication is 0.75 V, so analog meters must have an accurate low-voltage scale. The Simpson 250 and Sanwa SH-63Trd are examples of a passive VOM that is suitable. Nearly all battery operated digital multimeters that have a 2V AC range are suitable. (See Fig. A)

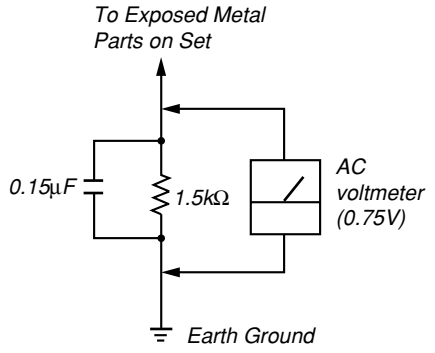

Fig. A. Using an AC voltmeter to check AC leakage.

TABLE OF CONTENTS

1. GENERAL 3

2. DIAGRAMS
2-1. Circuit Boards Location 3
2-2. Printed Wiring Board 4
2-3. Schematic Diagram 5

3. EXPLODED VIEW
3-1. Front Section 6

4. ELECTRICAL PARTS LIST 6

SAFETY-RELATED COMPONENT WARNING!!

COMPONENTS IDENTIFIED BY MARK ⚠ OR DOTTED LINE WITH MARK ⚠ ON THE SCHEMATIC DIAGRAMS AND IN THE PARTS LIST ARE CRITICAL TO SAFE OPERATION. REPLACE THESE COMPONENTS WITH SONY PARTS WHOSE PART NUMBERS APPEAR AS SHOWN IN THIS MANUAL OR IN SUPPLEMENTS PUBLISHED BY SONY.

ATTENTION AU COMPOSANT AYANT RAPPORT À LA SÉCURITÉ!

LES COMPOSANTS IDENTIFÉS PAR UNE MARQUE ⚠ SUR LES DIAGRAMMES SCHÉMATIQUES ET LA LISTE DES PIÈCES SONT CRITIQUES POUR LA SÉCURITÉ DE FONCTIONNEMENT. NE REMPLACER CES COMPOSANTS QUE PAR DES PIÈSES SONY DONT LES NUMÉROS SONT DONNÉS DANS CE MANUEL OU DANS LES SUPPÉMENTS PUBLIÉS PAR SONY.

SECTION 1
GENERAL

This section is extracted from instruction manual.

• **Location of controls**

Sub Woofer

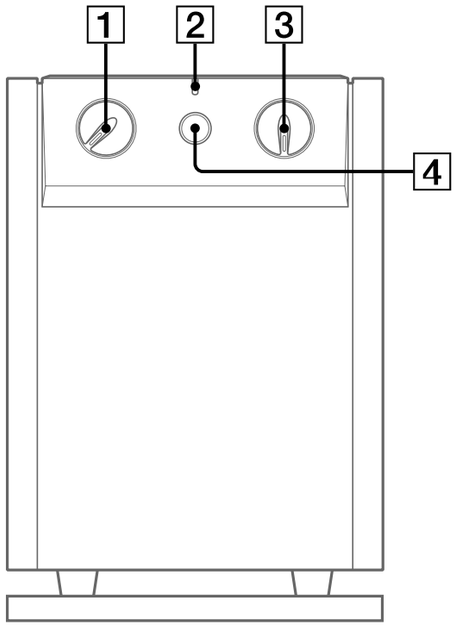

CUT OFF FREQ 3 (15)
LEVEL 1 (15)
PHASE 4 (15)
Power indicator 2

SECTION 2
DIAGRAMS

THIS NOTE IS COMMON FOR PRINTED WIRING BOARDS AND SCHEMATIC DIAGRAMS.
(In addition to this, the necessary note is printed in each block.)

For printed wiring boards.
Note:
- o——— : parts extracted from the component side.
- ▒▒▒▒ : Pattern from the side which enables seeing.

For schematic diagrams.
Note:
- All capacitors are in µF unless otherwise noted. pF: µµF 50 WV or less are not indicated except for electrolytics and tantalums.
- All resistors are in Ω and 1/4 W or less unless otherwise specified.
- ▭ : panel designation.

Note:	Note:
The components identified by mark ⚠ or dotted line with mark ⚠ are critical for safety. Replace only with part number specified.	Les composants identifiés par une marque ⚠ sont critiques pour la sécurité. Ne les remplacer que par une piéce portant le numéro spécifié.

- ▬▬ : B+ Line.
- - - - : B– Line.
- Voltages are dc with respect to ground under no-signal conditions.
  no mark : Power on
- Voltages are taken with a VOM (Input impedance 10MΩ). Voltage variations may be noted due to normal preduction tolerances.
- Signal path.
  ⇨ : AUDIO

2-1. Circuit Boards Location

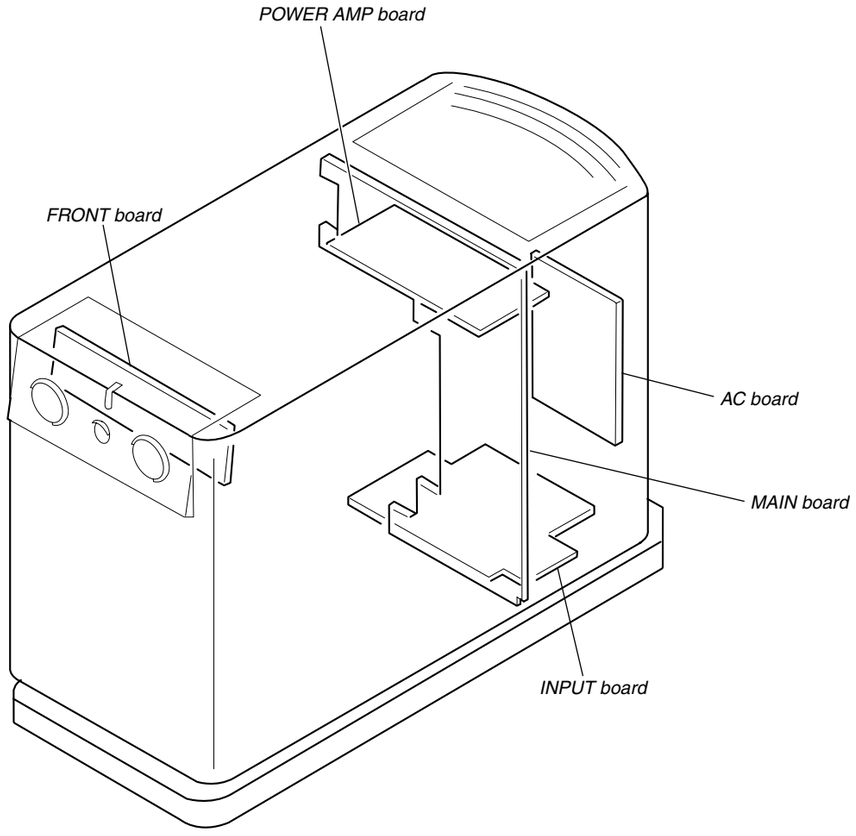

2-2. PRINTED WIRING BOARD

• See page 3 for Circuit Boards Location.

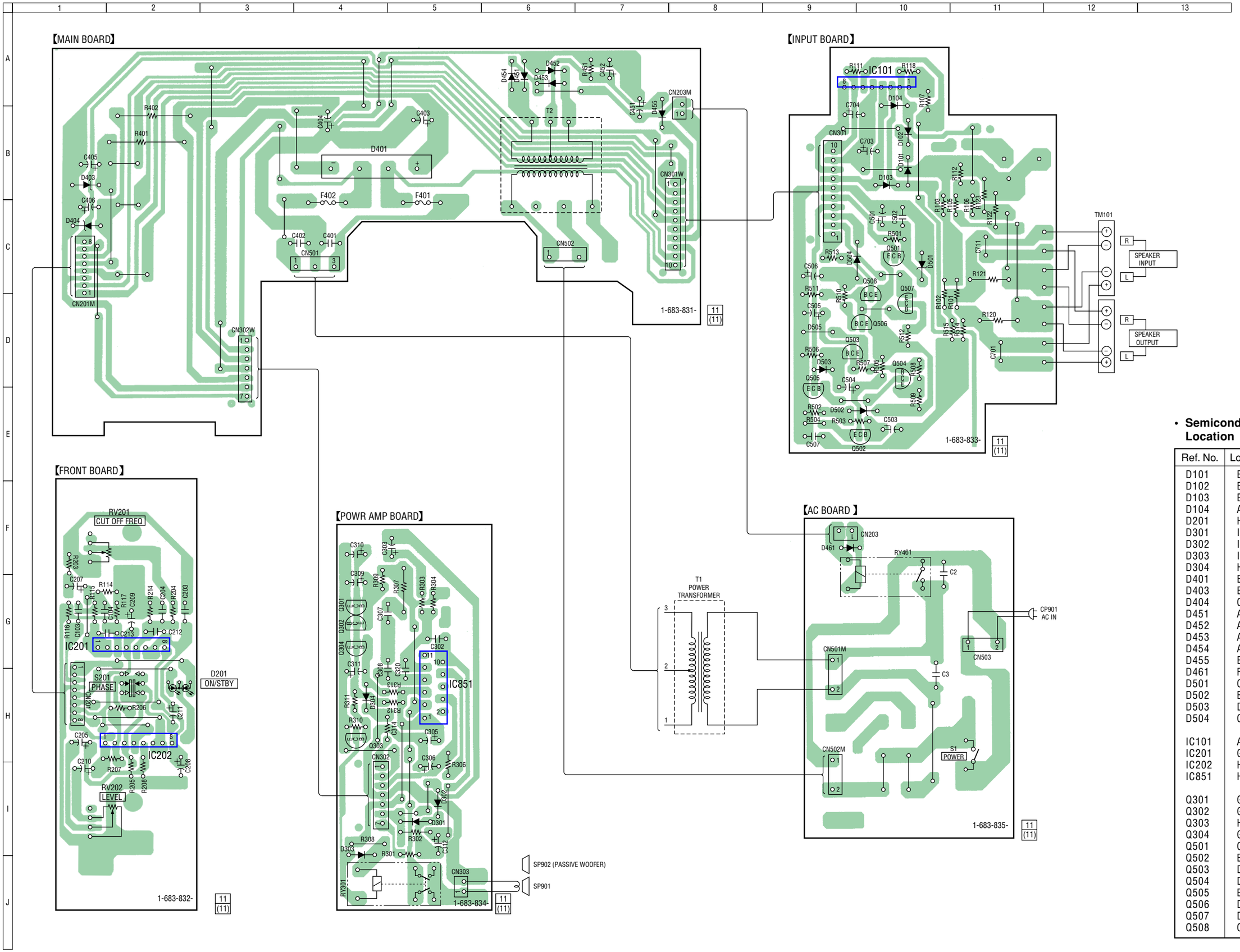

• **Semiconductor Location**

Ref. No.	Location
D101	B-10
D102	B-10
D103	B-10
D104	A-10
D201	H-2
D301	I-5
D302	I-5
D303	I-4
D304	H-4
D401	B-4
D403	B-1
D404	C-1
D451	A-6
D452	A-6
D453	A-6
D454	A-6
D455	B-7
D461	F-9
D501	C-10
D502	E-10
D503	D-9
D504	C-10
IC101	A-10
IC201	G-2
IC202	H-2
IC851	H-5
Q301	G-4
Q302	G-4
Q303	H-4
Q304	G-4
Q501	C-10
Q502	E-10
Q503	D-9
Q504	D-10
Q505	E-9
Q506	D-10
Q507	D-10
Q508	C-10

2-3. SCHEMATIC DIAGRAM

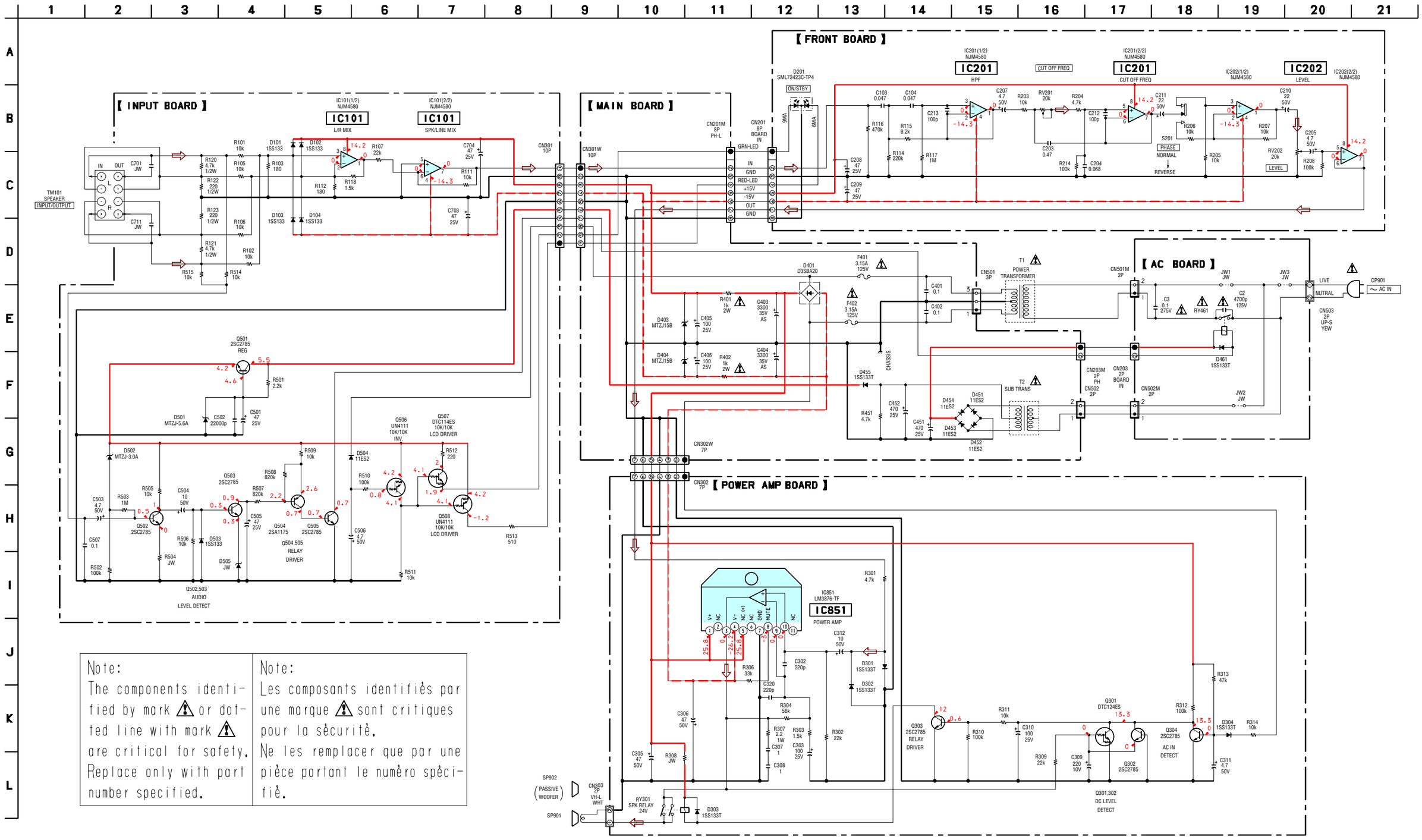

Note:	Note:
The components identified by mark ⚠ or dotted line with mark ⚠ are critical for safety. Replace only with part number specified.	Les composants identifiés par une marque ⚠ sont critiques pour la sécurité. Ne les remplacer que par une pièce portant le numéro spécifié.

SENTION 3
EXPLODED VIEWS

NOTE:
- -XX and -X mean standardized parts, so they may have some difference from the original one.
- Color Indication of Appearance Parts
  Example:
  KNOB, BALANCE (WHITE) . . . (RED)
  ↑ ↑
  Parts Color Cabinet's Color

- Items marked "*" are not stocked since they are seldom required for routine service. Some delay should be anticipated when ordering these items.
- The mechanical parts with no reference number in the exploded views are not supplied.
- Accessories and packing materials are given in the last of the electrical parts list.

The components identified by mark ⚠ or dotted line with mark ⚠ are critical for safety.
Replace only with part number specified.

Les composants identifiés par une marque ⚠ sont critiques pour la sécurité.
Ne les remplacer que par une piéce portant le numéro spécifié.

3-1. FRONT SECTION

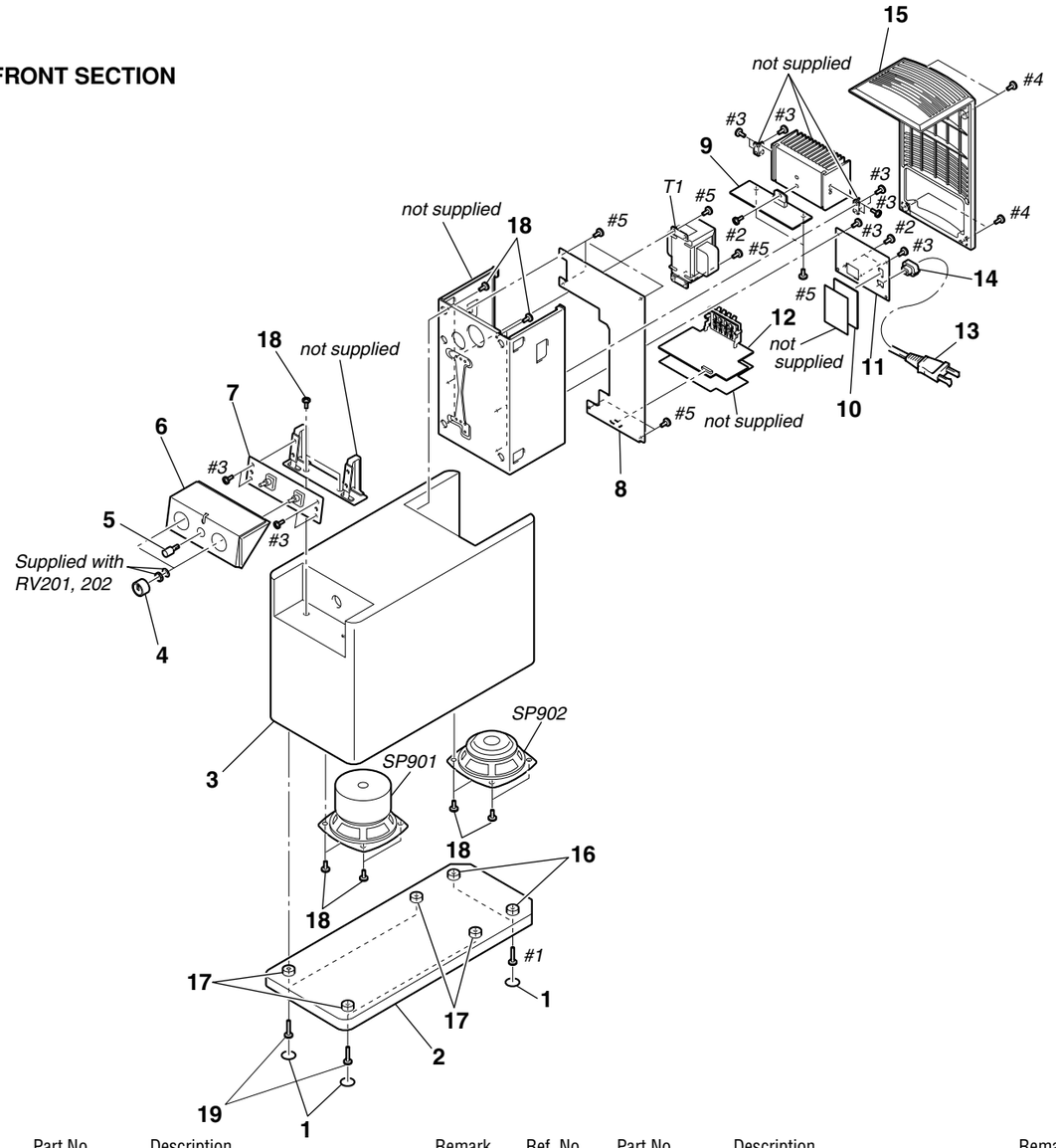

Ref. No.	Part No.	Description	Remark
1	4-220-455-01	FOOT (FELT)	
2	4-238-165-01	BOTTOM BOARD	
3	4-238-164-01	SPEAKER BOX	
4	4-238-158-01	KNOB	
5	4-238-159-01	BUTTON	
6	X-4954-421-1	FRONT PANEL ASSY	
7	A-4727-796-A	FRONT BOARD,COMPLETE	
8	A-4727-795-A	MAIN BOARD,COMPLETE	
9	A-4727-798-A	POWER AMP BOARD,COMPLETE	
10	A-4727-799-A	AC BOARD,COMPLETE	
11	4-238-152-01	PANEL, BACK	
12	A-4727-797-A	INPUT BOARD,COMPLETE	
⚠13	1-783-531-31	CORD, POWER	
* 14	3-703-244-00	BUSHING (2104), CORD	
15	4-238-157-01	COVER, BACK	
16	4-238-156-01	FOOT, SMALL	
17	4-238-155-01	FOOT, LARGE	
18	4-874-614-31	SCREW (4) (3.5X12), TAPPING	
19	2-110-606-01	SCREW (DIA. 4X3.5) (1), +BTP	
SP901	1-544-909-11	SPEAKER (10CM)	
SP902	1-544-910-11	SPEAKER (10CM)	
⚠T1	1-437-503-11	TRANSFORMER, POWER	

AC FRONT INPUT

SECTION 4
ELECTRICAL PARTS LIST

NOTE:
- Due to standardization, replacements in the parts list may be different from the parts specified in the diagrams or the components used on the set.
- -XX, -X mean standardized parts, so they may have some difference from the original one.
- Items marked "*" are not stocked since they are seldom required for routine service. Some delay should be anticipated when ordering these items.
- CAPACITORS:
  uF: µF
- RESISTORS
  All resistors are in ohms.
  METAL: metal-film resistor
  METAL OXIDE: Metal Oxide-film resistor
  F: nonflammable
- COILS
  uH: µH
- SEMICONDUCTORS
  In each case, u: µ, for example:
  uA...: µA... , uPA... , µPA... , uPB... , µPB... , uPC... , µPC... , uPD..., µPD...

When indicating parts by reference number, please include the board name.

The components identified by mark ⚠ or dotted line with mark ⚠ are critical for safety.
Replace only with part number specified.

Les composants identifiés par une marque ⚠ sont critiques pour la sécurité.
Ne les remplacer que par une piéce portant le numéro spécifié.

Ref. No.	Part No.	Description				Remarks
	A-4727-799-A	AC BOARD, COMPLETE				
		**********				
		< CAPACITOR >				
⚠C2	1-113-926-11	CERAMIC	0.0047uF	20%	125V	
⚠C3	1-131-983-11	FILM	0.1uF	10%	275V	
		< CONNECTOR >				
* CN501M	1-568-226-11	PIN, CONNECTOR 2P				
* CN502M	1-568-226-11	PIN, CONNECTOR 2P				
* CN503	1-580-230-31	PIN, CONNECTOR (PC BOARD) 2P				
		< DIODE >				
D461	8-719-911-19	DIODE 1SS119-25				
		< RELAY >				
⚠RY461	1-755-198-11	RELAY				
**********						
	A-4727-796-A	FRONT BOARD, COMPLETE				
		**********				
		< CAPACITOR >				
C103	1-136-161-00	FILM	0.047uF	5%	50V	
C104	1-136-161-00	FILM	0.047uF	5%	50V	
C203	1-137-194-81	FILM	0.47uF	5%	50V	
C204	1-136-495-11	FILM	0.068uF	5%	50V	
C205	1-126-163-11	ELECT	4.7uF	20%	50V	
C207	1-126-163-11	ELECT	4.7uF	20%	50V	
C208	1-119-799-11	ELECT	47uF	20%	25V	
C209	1-119-799-11	ELECT	47uF	20%	25V	
C210	1-128-858-11	ELECT	22uF	20%	50V	
C211	1-128-858-11	ELECT	22uF	20%	50V	
C212	1-162-282-31	CERAMIC	100PF	10%	50V	
C213	1-162-282-31	CERAMIC	100PF	10%	50V	
		< DIODE >				
D201	8-719-056-11	DIODE SML72423C-TP15 (ON/STBY)				
		< IC >				
IC201	8-759-261-93	IC NJM4580LD				
IC202	8-759-261-93	IC NJM4580LD				

Ref. No.	Part No.	Description				Remarks
		< RESISTOR >				
R114	1-247-887-00	CARBON	220K	5%	1/4W	
R115	1-249-428-11	CARBON	8.2K	5%	1/4W	F
R116	1-247-895-91	CARBON	470K	5%	1/4W	
R117	1-247-903-00	CARBON	1M	5%	1/4W	
R203	1-249-429-11	CARBON	10K	5%	1/4W	
R204	1-249-425-11	CARBON	4.7K	5%	1/4W	F
R205	1-249-429-11	CARBON	10K	5%	1/4W	
R206	1-249-429-11	CARBON	10K	5%	1/4W	
R207	1-249-429-11	CARBON	10K	5%	1/4W	
R208	1-249-441-11	CARBON	100K	5%	1/4W	
R214	1-249-441-11	CARBON	100K	5%	1/4W	
		< VARIABLE RESISTOR>				
RV201	1-227-435-11	RES, VAR 20K (CUT OFF FREQ)				
RV202	1-227-435-11	RES, VAR 20K (LEVEL)				
		< SWITCH >				
S201	1-554-419-00	SWITCH, PUSH (1 KEY) (PHASE)				
**********						
	A-4727-797-A	INPUT BOARD, COMPLETE				
		**********				
		< CAPACITOR >				
C501	1-126-947-11	ELECT	47uF	20%	25V	
C502	1-136-157-00	FILM	0.022uF	5%	50V	
C503	1-126-963-11	ELECT	4.7uF	20%	50V	
C504	1-126-964-11	ELECT	10uF	20%	50V	
C505	1-126-947-11	ELECT	47uF	20%	25V	
C506	1-126-963-11	ELECT	4.7uF	20%	50V	
C507	1-136-165-00	FILM	0.1uF	5%	50V	
C703	1-119-799-11	ELECT	47uF	20%	25V	
C704	1-119-799-11	ELECT	47uF	20%	25V	
		< CONNECTOR >				
* CN301	1-569-505-11	PIN, CONNECTOR 10P				
		< DIODE >				
D101	8-719-991-33	DIODE 1SS133T-77				
D102	8-719-991-33	DIODE 1SS133T-77				
D103	8-719-991-33	DIODE 1SS133T-77				
D104	8-719-991-33	DIODE 1SS133T-77				
D501	8-719-109-88	DIODE RD5.6ESB1				

Ref. No.	Part No.	Description				Remarks
D502	8-719-981-97	DIODE MTZJ-3.0A				
D503	8-719-991-33	DIODE 1SS133T-77				
D504	8-719-200-82	DIODE 11ES2				
		< IC >				
IC101	8-759-261-93	IC NJM4580LD				
		< TRANSISTOR >				
Q501	8-729-119-78	TRANSISTOR 2SC2785-HFE				
Q502	8-729-119-78	TRANSISTOR 2SC2785-HFE				
Q503	8-729-119-78	TRANSISTOR 2SC2785-HFE				
Q504	8-729-119-76	TRANSISTOR 2SA1175-HFE				
Q505	8-729-119-78	TRANSISTOR 2SC2785-HFE				
Q506	8-729-422-57	TRANSISTOR UN4111				
Q507	8-729-900-80	TRANSISTOR DTC114ES				
Q508	8-729-422-57	TRANSISTOR UN4111				
		< RESISTOR >				
R101	1-249-429-11	CARBON	10K	5%	1/4W	
R102	1-249-429-11	CARBON	10K	5%	1/4W	
R103	1-249-408-11	CARBON	180	5%	1/4W	F
R105	1-249-429-11	CARBON	10K	5%	1/4W	
R106	1-249-429-11	CARBON	10K	5%	1/4W	
R107	1-249-433-11	CARBON	22K	5%	1/4W	
R111	1-249-429-11	CARBON	10K	5%	1/4W	
R112	1-249-408-11	CARBON	180	5%	1/4W	F
R118	1-249-419-11	CARBON	1.5K	5%	1/4W	F
R120	1-260-107-11	CARBON	4.7K	5%	1/2W	
R121	1-260-107-11	CARBON	4.7K	5%	1/2W	
R122	1-260-320-11	CARBON	220	5%	1/2W	
R123	1-260-320-11	CARBON	220	5%	1/2W	
R501	1-249-421-11	CARBON	2.2K	5%	1/4W	F
R502	1-249-441-11	CARBON	100K	5%	1/4W	
R503	1-247-903-00	CARBON	1M	5%	1/4W	
R505	1-249-429-11	CARBON	10K	5%	1/4W	
R506	1-249-429-11	CARBON	10K	5%	1/4W	
R507	1-247-901-11	CARBON	820K	5%	1/4W	
R508	1-247-901-11	CARBON	820K-	5%	1/4W	
R509	1-249-429-11	CARBON	10K	5%	1/4W	
R510	1-249-441-11	CARBON	100K	5%	1/4W	
R511	1-249-429-11	CARBON	10K	5%	1/4W	
R512	1-249-409-11	CARBON	220	5%	1/4W	F
R513	1-249-442-11	CARBON	510	5%	1/4W	
R514	1-249-429-11	CARBON	10K	5%	1/4W	
R515	1-249-429-11	CARBON	10K	5%	1/4W	
		< TERMINAL >				
TM101	1-694-844-11	TERMINAL BOARD (8P) (SPEAKER IN/OUT)				

****

	A-4727-795-A	MAIN BOARD, COMPLETE				
		**********				
	1-533-293-31	FUSE HOLDER				
		< CAPACITOR >				
C401	1-136-165-00	FILM	0.1uF	5%	50V	
C402	1-136-165-00	FILM	0.1uF	5%	50V	
C403	1-126-860-11	ELECT	3300uF	20%	35V	
C404	1-126-860-11	ELECT	3300uF	20%	35V	
C405	1-104-665-11	ELECT	100uF	20%	25V	
C406	1-104-665-11	ELECT	100uF	20%	25V	
C451	1-126-941-11	ELECT	470uF	20%	25V	
C452	1-126-941-11	ELECT	470uF	20%	25V	
		< CONNECTOR >				
* CN201M	1-564-724-11	PIN, CONNECTOR (SMALL TYPE) 8P				
* CN203M	1-564-704-11	PIN, CONNECTOR (SMALL TYPE) 2P				
* CN301W	1-569-496-11	SOCKET, CONNECTOR 10P				
* CN302W	1-569-493-11	SOCKET, CONNECTOR 7P				
CN501	1-691-766-11	PLUG (MICRO CONNECTOR) 4P				
		< DIODE >				
D401	8-719-028-23	DIODE D3SBA20-4101				
D403	8-719-110-41	DIODE RD15ESB2				
D404	8-719-110-41	DIODE RD15ESB2				
D451	8-719-200-82	DIODE 11ES2				
D452	8-719-200-82	DIODE 11ES2				
D453	8-719-200-82	DIODE 11ES2				
D454	8-719-200-82	DIODE 11ES2				
D455	8-719-991-33	DIODE 1SS133T-77				
		< FUSE >				
⚠F401	1-533-451-11	FUSE, GLASS TUBE (DIA. 5) (3.15A 125V)				
⚠F402	1-533-451-11	FUSE, GLASS TUBE (DIA. 5) (3.15A 125V)				
		< RESISTOR				
⚠R401	1-215-892-11	METAL OXIDE	1K	5%	2W	
⚠R402	1-215-892-11	METAL OXIDE	1K	5%	2W	
R451	1-249-425-11	CARBON	4.7K	5%	1/4W	F
		< TRANSFORMER >				
⚠T2	1-437-504-11	TRANSFORMER, POWER				

****

	A-4727-798-A	POWER AMP BOARD, COMPLETE				
		**********				
		< CAPACITOR >				
C302	1-102-110-00	CERAMIC	220PF	10%	50V	
C303	1-119-827-11	ELECT MELF	100uF	20%	25V	
C305	1-107-909-11	ELECT	47uF	20%	50V	
C306	1-107-909-11	ELECT	47uF	20%	50V	
C307	1-136-177-00	FILM	1uF	5%	50V	
C308	1-136-177-00	FILM	1uF	5%	50V	
C309	1-126-934-11	ELECT	220uF	20%	10V	
C310	1-119-827-11	ELECT MELF	100uF	20%	25V	
C311	1-126-963-11	ELECT	4.7uF	20%	50V	
C312	1-107-906-11	ELECT	10uF	20%	50V	
C320	1-102-110-00	CERAMIC	220PF	10%	50V	
		< CONNECTOR >				
* CN302	1-569-502-11	PIN, CONNECTOR 7P				
* CN303	1-566-693-11	PIN, CONNECTOR 2P				
		< DIODE >				
D301	8-719-991-33	DIODE 1SS133T-77				
D302	8-719-991-33	DIODE 1SS133T-77				
D303	8-719-991-33	DIODE 1SS133T-77				
D304	8-719-991-33	DIODE 1SS133T-77				

The components identified by mark ⚠ or dotted line with mark ⚠ are critical for safety.
Replace only with part number specified.

Les composants identifiés par une marque ⚠ sont critiques pour la sécurité.
Ne les remplacer que par une piéce portant le numéro spécifié.

POWER AMP

Ref. No.	Part No.	Description				Remarks
		< IC >				
IC851	8-759-331-41	IC LM3876TF				
		< TRANSISTOR >				
Q301	8-729-029-86	TRANSISTOR DTC124ESA				
Q302	8-729-119-78	TRANSISTOR 2SC2785-HFE				
Q303	8-729-119-78	TRANSISTOR 2SC2785-HFE				
Q304	8-729-119-78	TRANSISTOR 2SC2785-HFE				
		< RESISTOR >				
R301	1-249-425-11	CARBON	4.7K	5%	1/4W	F
R302	1-249-433-11	CARBON	22K	5%	1/4W	
R303	1-249-419-11	CARBON	1.5K	5%	1/4W	F
R304	1-249-438-11	CARBON	56K	5%	1/4W	
R306	1-249-435-11	CARBON	33K	5%	1/4W	
R307	1-216-353-00	METAL OXIDE	2.2	5%	1W	
R309	1-249-433-11	CARBON	22K	5%	1/4W	
R310	1-249-441-11	CARBON	100K	5%	1/4W	
R311	1-249-429-11	CARBON	10K	5%	1/4W	
R312	1-249-441-11	CARBON	100K	5%	1/4W	
R313	1-249-437-11	CARBON	47K	5%	1/4W	
R314	1-249-429-11	CARBON	10K	5%	1/4W	
		< RELAY >				
RY301	1-515-920-11	RELAY (24V)				

****

Ref. No.	Part No.	Description	Remarks
		MISCELLANEOUS	
		**********	
⚠13	1-783-531-31	CORD, POWER	
SP901	1-544-909-11	SPEAKER (10CM)	
SP902	1-544-910-11	SPEAKER (10CM)	
⚠T1	1-437-503-11	TRANSFORMER, POWER	

****

Ref. No.	Part No.	Description	Remarks
		**********	
		HARDWARE LIST	
		**********	
#1	7-685-887-01	SCREW +BVTT 4X25 (S)	
#2	7-685-646-79	SCREW +BVTP 3X8 TYPE2 IT-3	
#3	7-685-871-01	SCREW +BVTT 3X6 (S)	
#4	7-685-873-01	SCREW +BVTT 3X10	
#5	7-685-880-01	SCREW +BVTT 4X6 (S)	

The components identified by mark ⚠ or dotted line with mark ⚠ are critical for safety.
Replace only with part number specified.

Les composants identifiés par une marque ⚠ sont critiques pour la sécurité.
Ne les remplacer que par une piéce portant le numéro spécifié.

MEMO

REVISION HISTORY

Clicking the version allows you to jump to the revised page.
Also, clicking the version at the upper right on the revised page allows you to jump to the next revised page.

Ver.	Date	Description of Revision
1.0	2001.09	New